RULEBOOK FOR INLINE FREESTYLE MALAYSIA COMPETITION BY NATIONAL TECHNICAL COMMITTEE OF MYSKATE 2026

1. GENERAL

INTRODUCTION

This rulebook acts as a guide for arranging inline freestyle competitions in Malaysia for 2026.
Latest update 18 November 2026 (Section 7 added: Speed Slalom - Beginner Category)

AGE CATEGORIES

SPEED SLALOM
Senior MEN
Senior WOMEN
Junior MEN
Junior WOMEN
(Junior = 18 Years Old and Below)

BATTLE SLIDE
Senior MEN
Senior WOMEN
Junior MEN
Junior WOMEN
(Junior = 15 Years Old and Below)

CLASSIC SLALOM
Senior MEN
Senior WOMEN
Junior MEN
Junior WOMEN
(Junior = 18 Years Old and Below)

FREE JUMP
Senior MEN
Senior WOMEN
Junior MEN
Junior WOMEN
(Junior = 18 Years Old and Below)

SPEED FISH/SNAKE (Age 12 and below)
MEN
WOMEN

If an event category have less than 3 participants, the event category will be merged with another with the same age group
(for example: when Junior slide women event have 2 participants, they will be merged with Junior slide men event)

MEDALS
- First Place (WINNER)
- Second Place (1st RUNNER UP)
- Third Place (2nd RUNNER UP)

PARTICIPATION TYPES
- All participants must register under a club to compete

ATHLETES REGULATIONS
- Athletes must be on the skating surface and ready when it is their time to perform
- The dividing of participants into groups is done before the competition begins and will not be changed should a participant withdraw or missing, unless it is permitted by the chief judge
- Athletes should not have inappropriate conduct towards judges and other participants during the competition. In case of unacceptable behaviors, the athlete will be liable to face a penalty of disqualification.
- Athletes' number tags are not to be misplaced or they will be liable to face a penalty of RM50 for replacing a new tag.
- The clothing should not be overly revealing or sexual in nature.
- Accessories and props are not permitted.
- Wearing a mask or face painting other than usual make-up is not permitted.
- Unclear clothes issues are the chief judge's decision.
- Disrespectful (e.g. sexual, violent, insulting) movements or gestures, especially towards the judges, are not appropriate and the skater can be penalized or disqualified.
- It's strictly forbidden to use racist, political, violent, homophobic, sexist or rude songs or songs that appeal to such things. Skaters who violate this will be punished by disciplinary action (losing points, losing ranks, disqualification, financial penalty). Also, if any complaints are received after the competition from third parties, same disciplinary actions could be taken against the skater.

APPEAL REGULATIONS
- Complaints against judging decisions must be presented in writing to the Chief Judge or arbitrator within 10 minutes after the results have been published, accompanied by a fee of RM100.
- The fee will be returned if the rule is in favor of the complaint.
- It is recommended the use of an official video recording of the event, on which the accuracy of performances and violation of the rules are recorded.
- Only the official video is used, and personal video is not accepted.

PERMITTED SKATES
- Athletes are only allowed to wear inline skates.
Definition: Inline skates are a type of roller skate with wheels arranged in a single line, typically two to five in number.
- Athletes are solely responsible that their equipment meets the highest safety and is ready for use.
The chief judge has the discretion to refuse any skates that are considered unsafe or give an unfair advantage.

OFFICIAL CONES
- The dimensions for slalom cones: maximum height 7.6 to 8 cm, maximum base diameter 7.4

to 7.5 cm, top diameter 2.5 to 2.7 cm.

ATHLETE'S NUMBER TAG
- Athletes' number tags are provided by the local organizer. The chief judge will decide the specified location of the number tag to be displayed on the athletes and the position depending on the layout of the competition area. No alteration of the number tag is permitted.

2. CLASSIC SLALOM

Competition Area
- There are 2 cone lines, with 2 meters between each line.
The line order is, starting with the line closest to the judges: 80 cm and 120 cm.
Both cone lines consist of 10 cones

Competition Regulations
- Skaters prepare a choreographed run to the music of their choice, which they perform in a specified allowed time at the competition.
- The music does not affect the points grading
- There are at least 2 rounds for each skater (first round and finals)
- final round is compete between 5 skaters
- Skaters must perform in all 2-cone lines of 80 cm, 120 cm and cross every cone interval.
- Immediately, after one skater has ended their performance, the next skater is called to the competition area for warm-up while the judges are grading the previous competitor
- Coaches and team leaders can accompany their skaters to the Result Area while waiting for the results to be announced.
- The timing for Freestyle Slalom Classic is 105-120 sec (1 min 45 sec – 2 min).
- The timing begins when the music starts. The music starts when the skater is ready.
- The performance ends when the skater indicates that they are finished or when the music stops.
- Exceeding 2 minutes (maximum time) will not be calculated and judge have the right to stop the skater

Grading Criteria
- The final result of a skater's performance for Freestyle Slalom Classic is based on two types of grading criteria: Technique score and Artistic score. The Artistic scoring is partly dependent on technical skill level
- Technique Grading Technique score is based on the following:
- Difficulty of slalom trick (See APPENDIX A: FREESTYLE SLALOM TRICK MATRIX). The Technical score is also affected by the "freestyle footwork" performed by a skater. The difficulty, speed and variety of movements performed will lead to a higher technical mark. Basic or simple freestyle footwork will lead to a decrease of the Technical mark. Tricks levels (from Matrix) are mandatory to be followed by Judges in case the tricks are performed a proper way - average speed, 80cm cones line, min 4 cones or 3 turns for spinning moves.
- Variety: Skaters are encouraged to perform and integrate a variety of slalom tricks that include sitting, spinning, wheeling and other tricks, etc.
- The minimum number of validated tricks for the performance is 8 (in different families and in any proportions), if the skater performs less tricks (or less than 8 successfully performed tricks) - he will be penalised by Judge in Variety mark of Technique.

- Continuity: Tricks should be blended to allow the competitor to move continuously.

Penalty Grading

-Timing Penalties if the skater finishes before 105 sec or after 120 sec, they receive a 10-point penalty. Same penalty for a pause too long of 10 seconds during performance

- Each kicked cone or cone that is moved off its mark enough to reveal its center point receives a 1 point penalty.
- In exceptional cases, whereby the skater kicks a cone out of the cone marking and the cone rolls back within the cone marking, there is no penalty for that cone.
- If a cone is knocked onto another cone, a 1 point penalty is given for each cone.

Falls or mistakes when performing, are penalized 2 points. Losses of balance are penalized by the scoring judges.

- If the skater stops performing due to external interruption, there is no penalty for the repeat performance. The second performance should start from the beginning.
- If the competitor stops performing due to internal interruption, there is a penalty of 5 points for the repeat performance.
- If a skater's music is received after the submission deadline, 10 point penalty is awarded.

If more than 5 cone intervals are not crossed by the skater, a 5 point penalty will be awarded.

Penalty Judge Reference Chart

FAIL TYPE	PENALTY POINT	DESCRIPTION
Falling	2	Falling on the ground
Impact Falling	5	Heavy fall to the ground
Performance Time	10	Performance ending before or after allowed time range (105-120 sec).
Performance Interruption	5	Performance interrupted by the skater is the discretion of chief judge.
Moved Cones	1	For each moved (or kicked) cone
Missed Intervals	5	For more than 5 missed intervals
Loss of Clothing	2	Clothing, including glasses, falling off
Clothing Prop	DQ	Using clothing as prop
Music Penalty	10	Music submitted after the deadline

3. SPEED SLALOM

Competition Area

-All calculations are made from the centre of the cone lines There are 2 lines of 20 cones, spaced at 80 cm intervals. The cone lines are placed 3 meters apart.

-There must be a divider placed at equal distance between the 2 cone lines with a minimum length of 15.2 m, and height between 15 and 20 cm.

- During Qualifying Phase (Time Trials) there are 2 parallel start lines, placed 40 cm apart. Each skater starting point is marked by a 2 m wide box (See Figure 5) 7.1.3.1.
- During Final Phase (KO) there is only one start line.
- The first cone's centre mark is placed 12 m away from the closest start line.
- The end line is placed 80 cm from the last cone's centre mark/
- The total length of each cone line is calculated as: 12 + (19 x 0.8) + 0.8 = 28m
- Electronic chronometer must be used for both qualifying rounds and final rounds.
- During the final rounds, there is no start line gate sensor and the finish line gate sensors must be set 20cm (+/- 2cm) above ground.

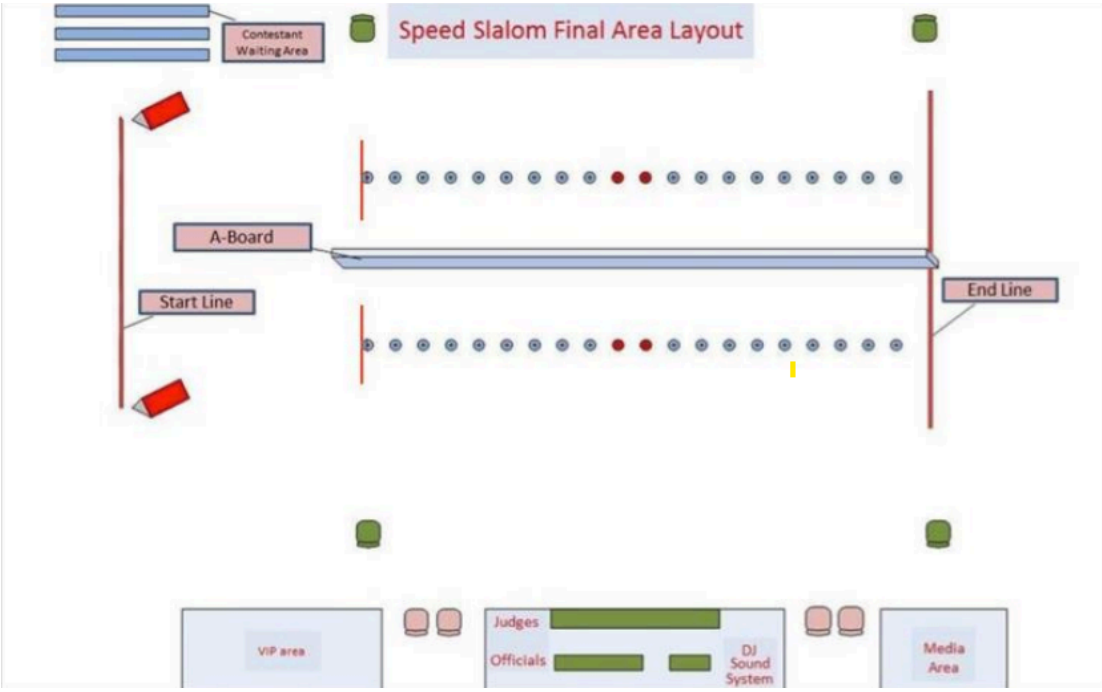

For the time trial round, only 1 side cones line will be used.

Competition Regulation

- Inline speed slalom is where **skaters race one foot at a time** through a straight line of 20 cones spaced 80 cm apart, aiming to finish as quickly as possible
- Speed Slalom is structured in two phases: A qualifying phase, based on individual time trials, and a final phase (KO Systems), based on grouping for the knockout.

- Qualifying Phase (Time trials) There are two free start runs (tries) per skater. Only the best run out of the two is taken into account for the qualification ranking. The skaters with the best times are qualified for the final phase.
- If a qualified skater gives up without any valid reason, his result is void and the remaining skater of the group goes through to the next round.
- If there is no winner in a group after 5 runs, the best-ranked skater at the qualifications is declared winner and goes through to the next round.
- At the end of the Semi-Final Round, the winners of each Semi-Final group compete for places 1 and 2 in the Final Round, after the two other skaters have competed for places 3 and 4 in a Consolation Final

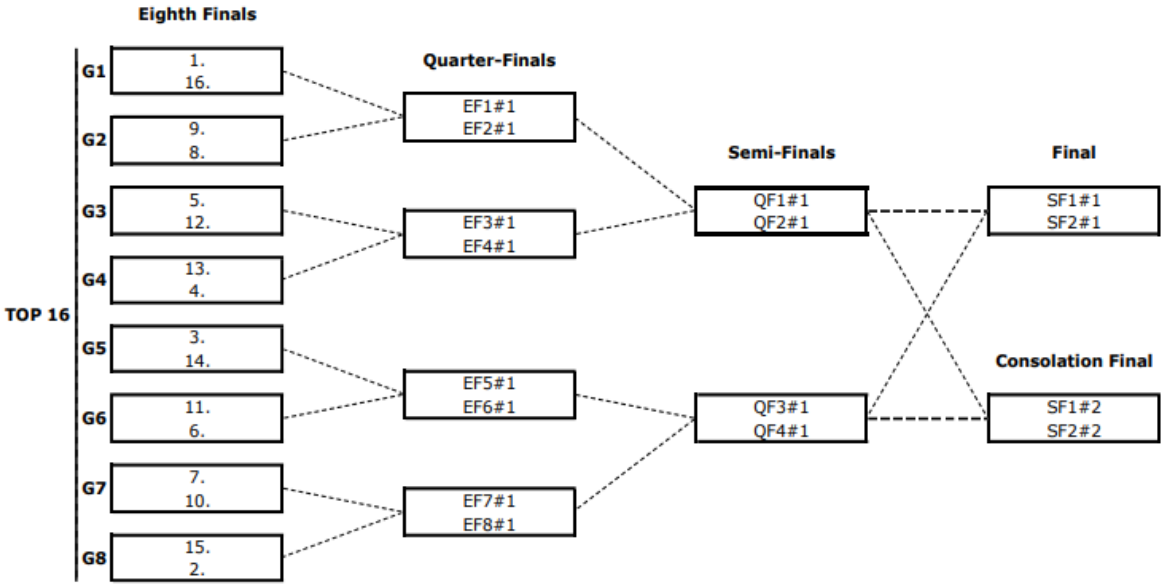

Speed Slalom Requirements
- Qualifying Phase:
- The start command for a free start qualification run is: “On Your Marks” followed by “Ready”
- The skater must start their run within 5 sec after the start command “Ready”, or they will be subjected to a false start warning. In the case of two consecutive false starts, the run is declared void.
- The skater’s front foot must be within the starting box (40cm x 2m) and no part of it, wheels included, should touch the front and back starting lines.

Final Phase (KO System).
- The start command process for a run of the Final Phase is: “On Your Marks. Set. [Beep Signal]”
- “On your marks”: The skaters should get ready and pick a starting stance within 3 sec, or they will be given a false start warning.
“Set”: No move or body oscillation is allowed after the “Set” command, or the skater will be given a false start warning.
Start Signal (“Beep”): The skaters must wait for the start signal (“Beep”) to go, or they will be given a false start warning.
-The skater’s front foot must be behind the starting line and no part of it, wheels included, should touch the starting line. Both skates or parts of these must touch the ground and must not be rolling. No wheels should be over the start line.

Entering the cone line
- A line, perpendicular to the cones and level with the front edge of the first cone, marks the end of the speed-up area and the beginning of the slaloming area.

Penalty Grading
- If a skater does not freeze within 3 sec after the “On your marks” command, they will be given a false start warning.
- After the “Set” command, no movement or body oscillation is allowed, or a false start warning will be given.
- If a skater starts before the start signal (Beep), they will be given a false start warning.
- If a skater makes two false starts (on the same run), they will be disqualified for the run.
- A penalty of +0.2 sec for each missed and kicked cone will be added to the skater's time.
- A cone for which the marking center is revealed is considered a kicked cone and a +0.2 sec penalty will be added to the skater's time.
- Moved cones for which the marking centers are not revealed are not penalized.
- In the special case a moved cone rolls back into its cone marking, covering its center, no penalty will be added.
- In case of athletes have no time (DQ) in their both qualification runs all of them will take the same last place in the ranking of the competition

4. FREESTYLE SLIDE

Skaters compete in small groups of 4 and have several runs to outbid their opponents in technique. The best two go through to the next round. The ranking is made by direct comparison between the skaters. The use of all protectives, including helmet is highly recommended for this discipline.

Competition Area
- The judges' tables are placed facing the execution area. They should be at least 1 m away from the competition area.
- A Speed-up Area of at least 20 m between the start line and the slide area line, for the competitor to accelerate in order to execute the trick.
- A Slide Area of 15 m delimited on both sides by lines of cones, placed 1 m apart from one another in order to indicate the 1 m distance marking

Composition of Groups
- There is pre pre-qualifying rounds for the grouping. Each skater will be group according to their results If time permits, skaters are allowed 2 runs, taking the best results for final grouping. If times do not permit, skaters are only allowed one run, taking the result for grouping.
- Each group has a minimum of 3 skaters and a maximum of 4 skaters.

- The number of groups depends on the number of skaters
- The number of runs in a group varies: Up to the Final Round, skaters have 3 runs each. In Final, skaters have 4 runs each

In the Final Round:
- At the end of the Semi-Final Round, the two best skaters of each group are qualified for the final to compete for places 1 to 4. The two last ranked of each group will compete for places 5 to 8 in the Consolation final. According to the head judge's decision prior to the start of the Freestyle Slides competition, the consolation final may be canceled.

Best Slide:
- At any round, in case of a tie between two skaters, a Best Slide may be asked by the judges.
- A Best Slide consists in one single slide or a combination of slides
- Each concerned skater has a maximum of 2 consecutive attempts. Only the best attempt is taken into consideration.

Technical Requirements
- The performances of the skaters within a same group are not scored, but ranked by direct comparison, after a deliberation of the judges who take a common decision. The judges base their ranking on technical criteria
- The difficulty of a trick is assessed according to its length as well as to the quality of its execution, of the skater's control from the start to the end of the trick. A shorter trick but with a mastered exit will be preferred to a longer trick from which the skater exits in collapsing.
- The minimum length for a single slide is 2 m.
- A Slide Combination (combo) consists of 2 or more single sliding tricks combined with transitions into 1 slide. In combo, the minimum length of each slide is 2 m and the transition distance must not exceed 1 m.
- Trick variety: Performing a wide range of tricks shows a more complete technical achievement than just focusing on one skill.

Penalties
In the case of falling, the slide is considered void.
If one or both hands of a skater touch the ground, the slide is considered void.
If a skater repeats several times the same slide during a round, only the best attempt will be taken into account.

5. FREE JUMP

Competition Area
- Skaters have several attempts to jump as high as possible over a bar.
A finish line must be drawn (tape) 5m after the bar.

Protective Gears
- There is no compulsory protective gear. Helmets and wrist guards are strongly recommended.

Competition Regulation
- The competitor will jump over a bar, they can try up to 3 times to jump over the bar (according to the head judge's decision), and if they successfully performed a jump - they can continue to the next round. The competitor can also decide not to jump a bar of jump, waiting for the next step (skip the height). The competitors cannot skip the jump at the first bar's height ("entry jump").
- If the bar after the jump falls or if the competitor goes under the bar of jump, the competitor fails the jump.
- If he jumps over and lands without falling, without touching the floor with his hand or his knee, or any other part of his body, the competitor succeeds. The jumper must cross the finish line to validate his attempt. If the skater falls after the finish line, the attempt will be validated. If the skater falls before, the attempt will be considered as a fail
- If the competitor fails his last try, he is out of the competition
- When only 3 skaters are left, the skaters shall choose their height in consultation with one and another. If no decision has been taken between the final athletes, the lowest height requested will be placed. The minimum will be 2cm more than the previous height.
- A skater, who unreasonably delays making a trial, renders him liable to have that trial disallowed and recorded as a failure. It is a matter for the Judges to decide, having regard to all the circumstances, what is an unreasonable delay. The official responsible shall indicate to the skater that all is ready for the trial to begin, and the period allowed for this trial shall commence from that moment.

Ties
- Ties shall be resolved as follows for places 1 to 3:
The athlete with the lowest number of jumps at the height at which the tie occurs shall be awarded the higher place.
- If the tie still remains, the jumpers have an additional jump. Each jumper has maximum three attempts, but if a jumper succeeds and the other fails at the same attempt, there will be no further attempts and the jumper who succeeded shall be awarded the higher place (Golden Jump). The bar is then alternately lowered or raised 2cm by 2 cm until one jumper succeeds at a given height/attempt.

6. **SPEED FISH/SNAKE (Age 12 and below)**

Competition Area:
-All calculations are made from the centre of the cone lines There are 2 lines of 15 cones, spaced at 80 cm intervals. The cone lines are placed 3 meters apart.
-There must be a divider placed at equal distance between the 2 cone lines with a minimum length of 15.2 m, and height between 15 and 20 cm.
- During Qualifying Phase (Time Trials) there are 2 parallel start lines, placed 40 cm apart. Each skater starting point is marked by a 2 m wide box (See Figure 5) 7.1.3.1.
- During Final Phase (KO) there is only one start line.
- The first cone's centre mark is placed 8 m away from the closest start line.
- The end line is placed 80 cm from the last cone's centre mark/
- The total length of each cone line is calculated as: 8 + (19 x 0.8) + 0.8 = 24m
- Electronic chronometer must be used for both qualifying rounds and final rounds.
- During the final rounds, there is no start line gate sensor and the finish line gate sensors must be set 20cm (+/- 2cm) above ground.

Competition Regulation:
- Speed Fish/Snake is where **skaters race on two foot from start to finish** using either through a straight line of 15 cones spaced 80 cm apart, aiming to finish as quickly as possible
- Speed FIsh/Snake is structured in two phases: A qualifying phase, based on individual time trials, and a final phase (KO Systems), based on grouping for the knockout.
- Qualifying Phase (Time trials) There are two free start runs (tries) per skater. Only the best run out of the two is taken into account for the qualification ranking. The skaters with the best times are qualified for the final phase.
- If a qualified skater gives up without any valid reason, the result is void and the remaining skater of the group goes through to the next round.
- If there is no winner in a group after 5 runs, the best-ranked skater at the qualifications is declared winner and goes through to the next round.
- At the end of the Semi-Final Round, the winners of each Semi-Final group compete for places 1 and 2 in the Final Round, after the two other skaters have competed for places 3 and 4 in a Consolation Final

Penalty Grading:
- If a skater does not freeze within 3 sec after the "On your marks" command, they will be given a false start warning.
- After the "Set" command, no movement or body oscillation is allowed, or a false start warning will be given.
- If a skater starts before the start signal (Beep), they will be given a false start warning.
- If a skater makes two false starts (on the same run), they will be disqualified for the run.
- A penalty of +0.2 sec for each missed and kicked cone will be added to the skater's time.
- A cone for which the marking center is revealed is considered a kicked cone and a +0.2 sec penalty will be added to the skater's time.
- Moved cones for which the marking centers are not revealed are not penalized.
- In the special case a moved cone rolls back into its cone marking, covering its center, no penalty will be added.

7. SPEED SLALOM – BEGINNER CATEGORY

Scope
- Beginner Speed Slalom follows this MySkate rulebook. The rules are the same as Speed Slalom (Section 3), except where stated in this section.
- **Eligibility: Beginner Speed Slalom is not open to skaters who have a World Skate World Ranking, or who won Champion (1st place) in Speed Slalom at a previous competition.** These skaters must enter the official Speed Slalom category.
- The age groups (for example U8, U12, U15 or Open) are set by the organiser for each competition and announced before registration opens. Boys and girls compete separately.
- If a category has less than 3 participants, it may be merged as described in Section 1.

Competition Area
- The course is the same as Speed Slalom (Section 3): 20 cones spaced at 80 cm intervals, the first cone's centre mark placed 12 m away from the start line, and the end line placed 80 cm from the last cone's centre mark.
- For the time trial round, only 1 side cone line will be used; during the knockout, both cone lines are used.

Competition Regulation
- Skaters race **on one foot** through a straight line of 20 cones, aiming to finish as quickly as possible.
- Beginner Speed Slalom is structured in two phases: a qualifying phase (time trials) and a final phase (knockout).
- Qualifying Phase (Time trials): there are two free start runs per skater. Only the best run out of the two is taken into account for the qualification ranking.
- Final Phase (Knockout): the best skaters from the qualifying ranking go through to the knockout. The number of skaters in the knockout (2, 4, 8 or 16) depends on the number of entries and is decided by the chief judge before the competition starts. Skaters are paired according to their qualifying ranking.
- Each knockout duel is won by the first skater to win 2 runs. The run winner is the skater with the lower time after cone penalties. A disqualified run loses the run. If both skaters are disqualified, or both times are equal, the run is skated again.
- If there is no winner in a duel after 5 runs, the best-ranked skater at the qualifications is declared winner and goes through to the next round.
- If a qualified skater gives up without any valid reason, the result is void and the other skater of the duel goes through to the next round.
- At the end of the Semi-Final Round, the winners of each Semi-Final compete for places 1 and 2 in the Final, and the two other skaters compete for places 3 and 4 in a Consolation Final.

Penalty Grading
- A penalty of +0.2 sec for each missed and kicked cone will be added to the skater's time. A cone for which the marking center is revealed is considered a kicked cone.
- **Cone limit: a run with more than 4 penalised cones is disqualified (5 cones = DQ for that run).** The same cone limit also applies to Speed Fish/Snake (Section 6).
- Moved cones for which the marking centers are not revealed are not penalized. In the special case a moved cone rolls back into its cone marking, covering its center, no penalty will be added.
- If a skater makes two false starts (on the same run), they will be disqualified for the run.
- In case athletes have no time (DQ) in both their qualification runs, all of them will take the same last place in the ranking of the competition.

APPENDIX A: FREESTYLE SLALOM TRICK MATRIX **(NOT APPLICABLE FOR BEGINNER CATEGORY)**

All technical tricks based on statility, average speed, on 80cm cones (min 4 cones on tricks, min 3 cones (or spins) for spinning moves)

		Others	Sitting	Jumps	Wheelings	Spins		
	10		Toe Christie Back			Toe Footgun Spin	10	
	9		Toe Christie	Toe Wiper			9	
	8						8	
	7						7	
A	6						6	A
(50-60)	5					Internal / External 1 Cone 7 Back	5	(50-60)
	4	Butterfly	Toe Footgun Back			Internal / External Backward 7	4	
	3						3	
	2				Wheeling Special/Wheeling Shifts/French Shift	Internal / External 7	2	
	1		TeaPot/Superman				1	
	10		Toe Footgun		Flipping 360 Shift / Wheeling Fishleg / Daynight	Internal / External 1 Cone 7	10	
	9			Footgun Footspin			9	
	8			Kazatchok Back			8	
B	7	Toe Reverse Eagle	Christie Back				7	
(40-50)	6						6	B
	5						5	(40-50)
	4						4	
	3						3	
	2	Cobra Back					2	
	1				Sewing Machine		1	
	10		Christie		Wheeling Back		10	
	9	Cobra	Footgun Back	Kazatchok		Cross Korean Volt Back	9	
	8	Reverse Eagle				One Cone Cross Korean Volt	8	
	7					Cross Korean Volt	7	
C	6	Toe Wheeling Eagle			Flat Shift / Flat Fake		6	C
(30-40)	5				Wheeling Forward	Two Wheels Spinning	5	(30-40)
	4			Wiper			4	
	3		Cross Sitting Heel-Toe Back			Reverse J-Turn	3	
	2	Z-Eagle	Footgun				2	
	1		Cross Sitting Heel Toe	Special Jumps			1	
	10	Special		Footspin			10	
	9	Brush				J-Turn	9	
	8	Heel Toe Special	Sitting Heel-Toe Back			2 Feet Spin	8	
	7	Eagle / Eagle Cross / Sidesurf	Sitting Heel-Toe / Full Remi			Total Cross	7	
D	6				Heel-Toe Back		6	D
(20-30)	5						5	(20-30)
	4				Fan Volt Series / Sweepers		4	
	3						3	
	2						2	
	1						1	
	10	Eight	Small Car / 5 Wheels Sitting				10	
	9	Eight Back			One Foot Back	Italian / Volt	9	
	8	Crazy Legs		X Jump			8	
	7			Crab Cross			7	
E	6					Crazy Sun / Mexican	6	E
(10-20)	5	Stroll / Back Stroll					5	(10-20)
	4	Crazy / Double Crazy Series				Sun / Mabrouk	4	
	3	Chap Chap / X		Crab	One Foot		3	
	2	Nelson / Nelson Back					2	
	1		Sitting Fish		Cross / Snake / Fish Series		1	
		Others	Sitting	Jumps	Wheelings	Spins		

APPENDIX B: FREESTYLE SLIDES TRICK MATRIX

Technical Difficulty Rate Based on 2 Meters					
Technical Level	**Family 1**	**Family 2**	**Family 3**	**Family 4**	**Family 5**
A	V - Toe Toe	Cowboy Heel Heel	8 Cross Heel Heel		
		Cowboy Toe Toe	8 Cross Toe Toe		
			8 Cross Toe Heel		
		Cowboy Toe Heel			
			8 Cross 8 Wheels		
	Cross Ern Sui Heel Heel	Cowboy 8 Wheels	Cross UFO Heel Heel	FastSlide Heel	
			Cross UFO Toe Toe	FastSlide Toe	
	Cross Ern Sui Heel Toe	Backslide Toe	Cross UFO Toe heel		
	Cross Ern Sui Toe Toe	Backslide Heel	Cross UFO 8 Wheels		
	Cross Ern Sui Heel				Cross Parallel Heel Heel
	Cross Ern Sui Toe				Cross Parallel Toe Heel
					Cross Parallel Toe Toe
B	Cross Ern Sui 4 wheels		Eagle Toe Toe		
			Eagle Toe Heel		
			Eagle 8 Wheels		
			Eagle Heel Heel		
	Ern Sui Heel Heel		Ufo special heel heel		
	Ern Sui Toe Heel		Ufo special toe toe	FastSlide 4 Wheels	
	Ern Sui Heel Toe		Ufo special toe heel		Unity / Savannah Heel Heel
	Ern Sui Toe Toe		Ufo special heel toe		Unity / Savannah Toe Toe
		Backslide 4 Wheels	UFO Toe Toe		Unity / Savannah Toe Heel
			UFO Toe Heel	Magic Toe Toe	
			UFO Heel Heel	Magic Heel Heel	
				Magic Toe Heel	Cross Parallel 8 Wheels
			Ufo special 8 wheels		
			UFO 8 Wheels		
C		Cross Acid Toe Heel			Parallel Toe Toe
	Ern Sui 4 Wheels	Cross Acid Heel Heel		FastWheel Heel	Parallel Heel Toe
		Cross Acid Heel Toe		FastWheel Toe	Parallel Heel Heel
		Cross Acid Toe Toe		FastWheel Heel Heel	Unity / Savannah 8 Wheels
				FastWheel Toe Toe	
				FastWheel Toe Heel	
				FastWheel Heel Toe	
D		Barrow Heel Toe			
	Soyale Heel Heel	Barrow Toe Heel			
	Soyale Heel Toe	Barrow Toe			
	Soyale Toe Heel	Barrow Heel			
	Soyale Toe Toe	Barrow 4 Wheels			
	Soyale Heel	Cross Acid Toe			Parallel 8 Wheels
	Soyale Toe	Cross Acid Heel			
	Soyale 4 Wheels	Acid Toe Heel			
		Acid Heel Toe		Magic 8 Wheels	
		Acid Toe Toe		FastWheel 4 Wheels heel	
				FastWheel 4 Wheels toe	
		Acid toe 4 wheels			
E	Soyale 8 wheels	Barrow 8 wheels			
				Powerslide Toe	
				Powerslide Heel	
		Cross Acid 8 Wheels		Powerslide Toe Toe	
				Powerslide Heel Heel	
				Powerslide Heel Toe	
		Acid Toe		Soul Toe (Fastwheel Toe)	
		Acid Heel		Soul Heel (Faswheel Heel)	
		Acid 4 Wheels		Soul 4 Wheels (Fastwheel 4 wheels)	
				Powerslide	